Electrolux PROFESSIONAL

Modular Cooking Range Line thermaline 80 - Full Module Freestanding Electric Fry Top, 1 Side with Backsplash, H=700

ITEM #

MODEL #

NAME #

SIS #

AIA #

588365 (MAHBEBHDAO)	Electric Fry Top with smooth chrome Plate, one-side operated with backsplash
588369 (MAHDEBHDAO)	Electric Fry Top with ribbed chrome Plate, one-side operated with backsplash

Short Form Specification

Item No.

Unit constructed according to DIN 18860_2 with 20 mm drop nose top and 70 mm recessed plinth. Internal frame for heavy duty sturdiness in stainless steel. 2 mm top in 1.4301 (AISI 304). Flat surface construction, easily cleanable. THERMODUL connection system enables seamless worktop when units are connected and avoids soil penetrating. Chromium-plated mild steel cooking surface with non-stick finishing for optimal grilling. Powerblock heating system for optimal temperature distribution. Stainless steel high splash guards on the rear and sides. Large drain hole allows draining of cooking juices into a large collector. Overheat protection switches off the supply in case of overheating. Standby function saves energy and quickly recovers maximum power. Metal knobs with embedded hygienic silicon "soft" grip enable easier handling and cleaning.
IPX5 water resistant certification.
Configuration: Freestanding, one-side operated with backsplash.

APPROVAL:

Main Features

- Large drain hole on cooking surface permits the draining of residual cooking juices into a large collector placed under the cooking surface.
- Overheat protection: a temperature sensor switches off the supply in case of overheating.
- Stainless steel high splash guards on the rear and sides of cooking surface.
- Units have separate controls for each half module of the cooking surface.
- All major components may be easily accessed from the front.
- THERMODUL connection system creates a seamless work top when units are connected to each other thus avoiding soil penetrating vital components and facilitating the removal of units in case of replacement or service.
- Metal knobs with embedded hygienic silicon "soft" grip for easier handling and cleaning. The special design of the controls prevent infiltration of liquids or soil into vital components.
- Large visible digital display manufactured in tempered glass to resist heat and chemicals, showing temperatures or power settings. The display also shows on/off status of the appliance and on/off status of the heating elements.
- Powerblock heating system for optimal temperature distribution.

Construction

- Cooking surface to be completely smooth or completely ribbed.
- IPX5 water resistance certification.
- 2 mm top in 1.4301 (AISI 304).
- Unit constructed according to DIN 18860_2 with 20 mm drop nose top and 70 mm recessed plinth.
- Flat surface construction with minimal hidden areas to easily clean all surfaces
- Cooking surface in chromium-plated mild steel with non-stick finishing for optimum grilling results.
- Internal frame for heavy duty sturdiness in stainless steel.

Sustainability

- Standby function for energy saving and fast recovery of maximum power.

Optional Accessories

- Connecting rail kit for appliances with backsplash, 800mm — PNC 912497 ❑
- Portioning shelf, 800mm width — PNC 912526 ❑
- Portioning shelf, 800mm width — PNC 912556 ❑
- Folding shelf, 300x800mm — PNC 912577 ❑
- Folding shelf, 400x800mm — PNC 912578 ❑
- Fixed side shelf, 200x800mm — PNC 912583 ❑
- Fixed side shelf, 300x800mm — PNC 912584 ❑
- Fixed side shelf, 400x800mm — PNC 912585 ❑
- Stainless steel front kicking strip, 800mm width — PNC 912634 ❑
- Stainless steel side kicking strip left and right, against the wall, 800mm width — PNC 912658 ❑
- Stainless steel side kicking strip left and right, back-to-back, 1610mm width — PNC 912661 ❑
- Stainless steel plinth, against wall, 800mm width — PNC 912844 ❑
- Connecting rail kit for appliances with backsplash: modular 80 (on the left), ProThermetic tilting (on the right), ProThermetic stationary (on the left) to ProThermetic tilting (on the right) — PNC 912977 ❑
- Connecting rail kit for appliances with backsplash: modular 80 (on the right), ProThermetic tilting (on the left), ProThermetic stationary (on the right) to ProThermetic tilting (on the left) — PNC 912978 ❑
- Back panel, 800x700mm, for units with backsplash — PNC 913013 ❑
- Stainless steel panel, 800x700mm, against wall, left side — PNC 913093 ❑
- Stainless steel panel, 800x700m, against the wall, right side — PNC 913097 ❑
- Endrail kit, flush-fitting, with backsplash, left — PNC 913113 ❑
- Endrail kit, flush-fitting, with backsplash, right — PNC 913114 ❑
- Scraper for smooth plates (only for 588365) — PNC 913119 ❑
- Scraper for ribbed plates (only for 588369) — PNC 913120 ❑
- Endrail kit (12.5mm) for thermaline 80 units with backsplash, left — PNC 913204 ❑
- Endrail kit (12.5mm) for thermaline 80 units with backsplash, right — PNC 913205 ❑
- U-clamping rail for back-to-back installations with backsplash — PNC 913226 ❑
- Insert profile D=800mm — PNC 913230 ❑
- Perforated shelf for warming cabinets and cupboard bases (one-side operated TL80-85-90 and two-side operated for TL80) — PNC 913234 ❑
- Energy optimizer kit 24A - factory fitted — PNC 913246 ❑
- Side reinforced panel only in combination with side shelf, for against the wall installations, left — PNC 913263 ❑
- Side reinforced panel only in combination with side shelf, for against the wall installations, right — PNC 913265 ❑
- Shelf fixation for TL80-85-90 one-side operated, TL80 two-side operated — PNC 913281 ❑
- Filter W=800mm — PNC 913665 ❑
- Stainless steel dividing panel, 800x700mm, (it should only be used between Electrolux Professional thermaline Modular 80 and thermaline C80) — PNC 913668 ❑
- Stainless steel side panel, 800x700mm, flush-fitting (it should only be used against the wall, against a niche and in between Electrolux Professional thermaline and ProThermetic appliances and external appliances - provided that these have at least the same dimensions) — PNC 913684 ❑

Recommended Detergents

- C41 HI-TEMP RAPID DEGREASER. Suitable for cleaning plates and grills with high temperature surfaces (max 175°C). Pack of 6 1l bottles (includes 1 spray bottle code 0S2331) — PNC 0S2292 ❑

Electrolux PROFESSIONAL

Modular Cooking Range Line thermaline 80 - Full Module Freestanding Electric Fry Top, 1 Side with Backsplash, H=700

Electric

Supply voltage:	
588365 (MAHBEBHDAO)	400 V/3N ph/50/60 Hz
588369 (MAHDEBHDAO)	400 V/3N ph/50/60 Hz
Total Watts:	15.3 kW

Key Information:

Configuration:	On Base;One-Side Operated
Cooking Surface Depth:	615 mm
Cooking Surface Width:	700 mm
Working Temperature MIN:	80 °C
Working Temperature MAX:	280 °C
External dimensions, Width:	800 mm
External dimensions, Depth:	800 mm
External dimensions, Height:	700 mm
Storage Cavity Dimensions (width):	580 mm
Storage Cavity Dimensions (height):	330 mm
Storage Cavity Dimensions (depth):	740 mm
Net weight:	150 kg
Cooking surface type:	
588365 (MAHBEBHDAO)	Smooth
588369 (MAHDEBHDAO)	Ribbed
Cooking surface - material:	Chromium Plated mild steel mirror

Sustainability

Current consumption:	22.1 Amps

Electrolux PROFESSIONAL

Modular Cooking Range Line
thermaline 80 - Full Module Freestanding Electric Fry Top, 1 Side with Backsplash, H=700

Front

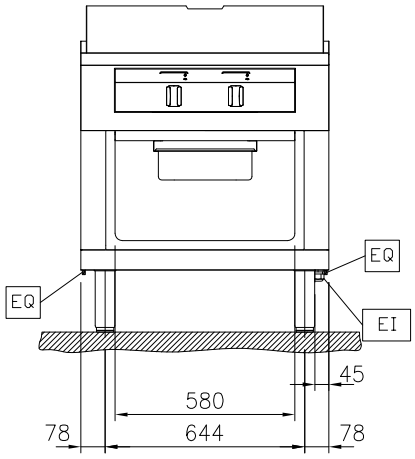

Side

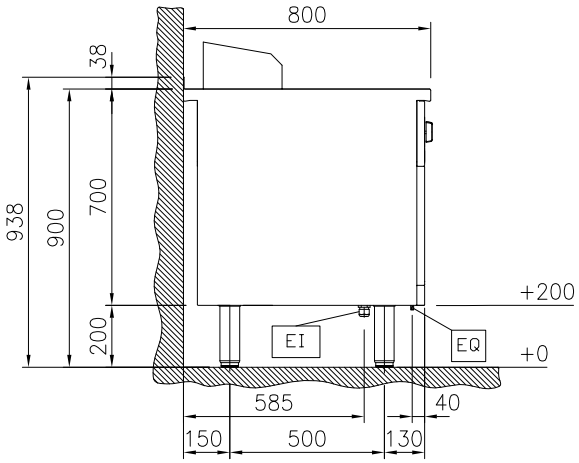

EI = Electrical inlet (power)
EQ = Equipotential screw

Top

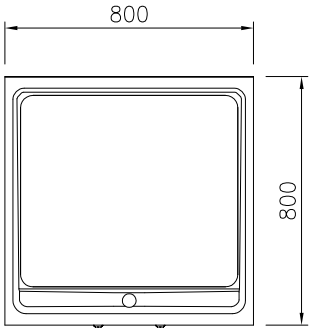

Front

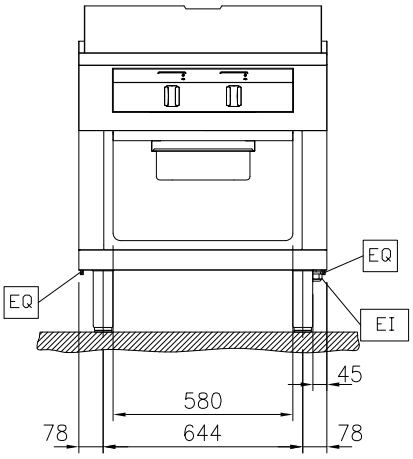

Side

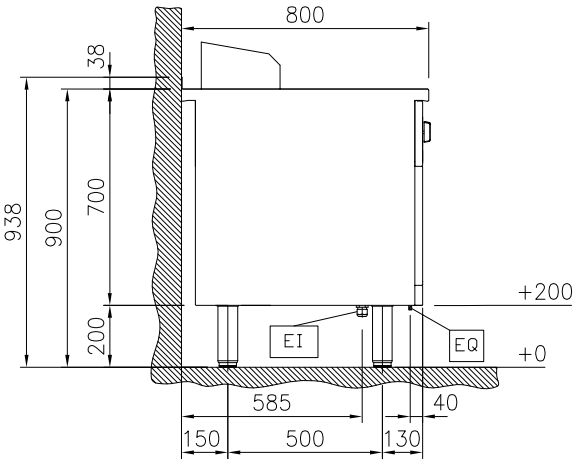

EI = Electrical inlet (power)
EQ = Equipotential screw

Top

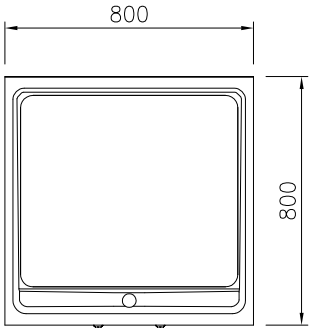

The company reserves the right to make modifications to the products without prior notice. All information correct at time of printing.